PART MOLDED IN VALOX 357U POLYCARBONATE WITH PBT OR APPROVED EQUIVALENT

RESIN COLOR: BLACK

PART MUST HAVE EXCELLENT UV RESISTANCE

USE PART SYMMETRY

HATCHED AREA MUST BE FREE FROM MOLD IRREGULARITIES, EJECTOR PINS, AND GATES

EXPOSED SURFACES OF PART TO BE LIGHTLY TEXTURED TO "CHARMILLES #24 FINISH" OR EQUIVALENT EXCEPT IN AREAS SHOWN

MOLD SNAPNRACK LOGO WITH LETTERING 0.010IN DEEP ON FRONT FACE AS SHOWN

2.5 DEGREES DRAFT UNLESS STATED OTHERWISE

STANDARD THICKNESS = 0.070 IN UNLESS STATED OTHERWISE

ALL DIMENSIONS IN INCHES UNLESS STATED OTHERWISE

STANDARD TOLERANCES:
0.000 -> +/- 0.005
0.00 -> +/- 0.010
0.0 -> +/- 0.10

0 DEG -> +/- 1 DEG

REFER TO 3D CAD MODEL FOR DIMENSIONS NOT SHOWN

PART WEIGHT: 0.014 LBS

REVISION:

A	2/14/2019	NEW ITEM	MJA
A	3/18/2019	NU000973	MJA
B	5/1/2019	NU000981	MJA
B	5/21/2019	NU000986	BDP

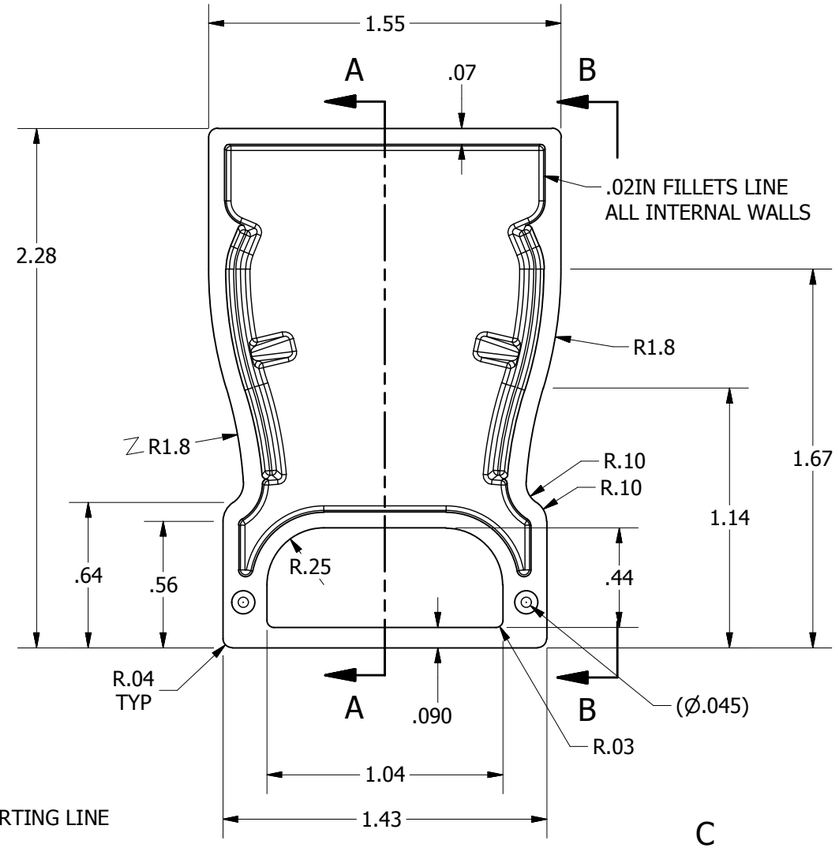

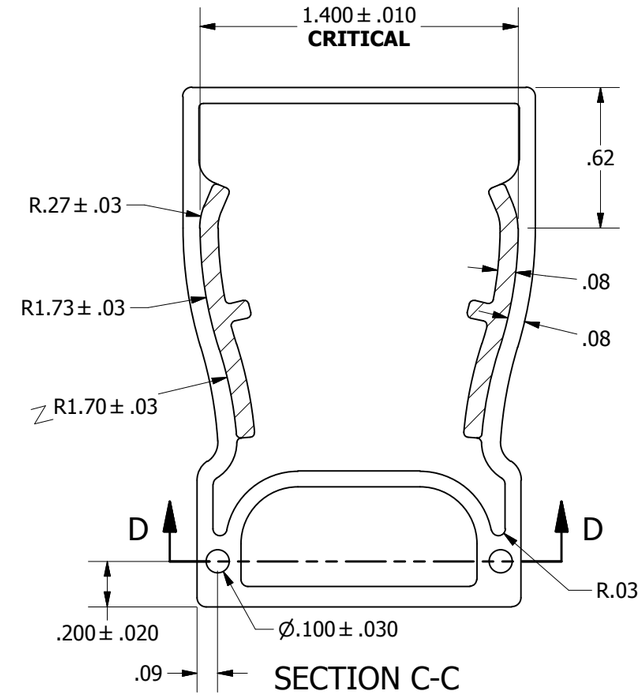

SECTION C-C

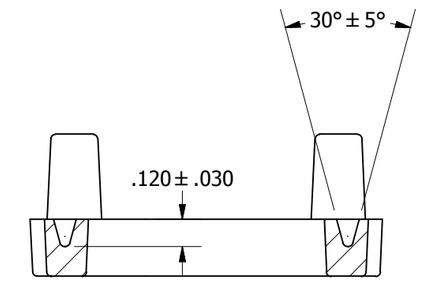

SECTION D-D

PARTING LINE

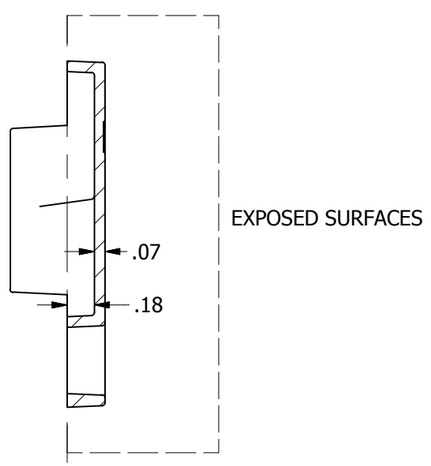

SECTION A-A

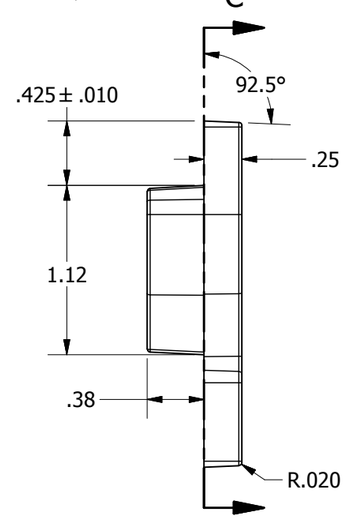

VIEW B-B

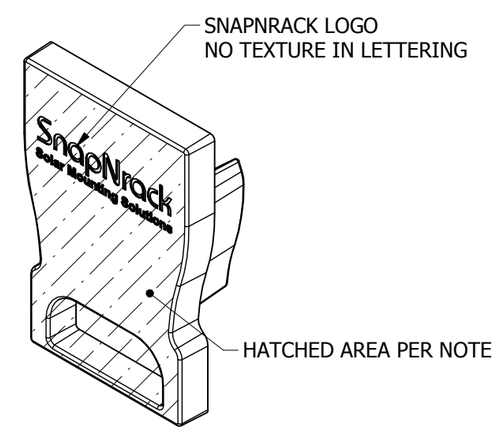

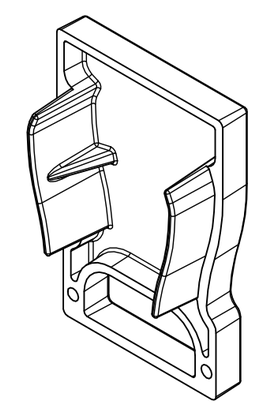

SnapNrack™ Solar Mounting Solutions

Sunrun South LLC
595 MARKET STREET, 29TH FLOOR • SAN FRANCISCO, CA 94105 USA
PHONE (415) 580-6900 • FAX (415) 580-6902

THE INFORMATION IN THIS DRAWING IS CONFIDENTIAL AND PROPRIETARY. ANY REPRODUCTION, DISCLOSURE, OR USE THEREOF IS PROHIBITED WITHOUT THE WRITTEN CONSENT OF SUNRUN SOUTH LLC.

DESIGNER: M.Affentranger
DRAFTER: M.Affentranger
APPROVED BY: G.McPheeters

SCALE: DNS
DATE: 5/21/2019

PART NUMBER: 232-02484

DESCRIPTION: SNAPNRACK, UR-60 END CAP

REV: B