ITEM NO.	DESCRIPTION	QTY.
1	FLASHING, REPLACEMENT TILE, W-TILE, ALUMINUM, MILL	1

AVAILABLE IN MILL, AND BLACK FINISHES

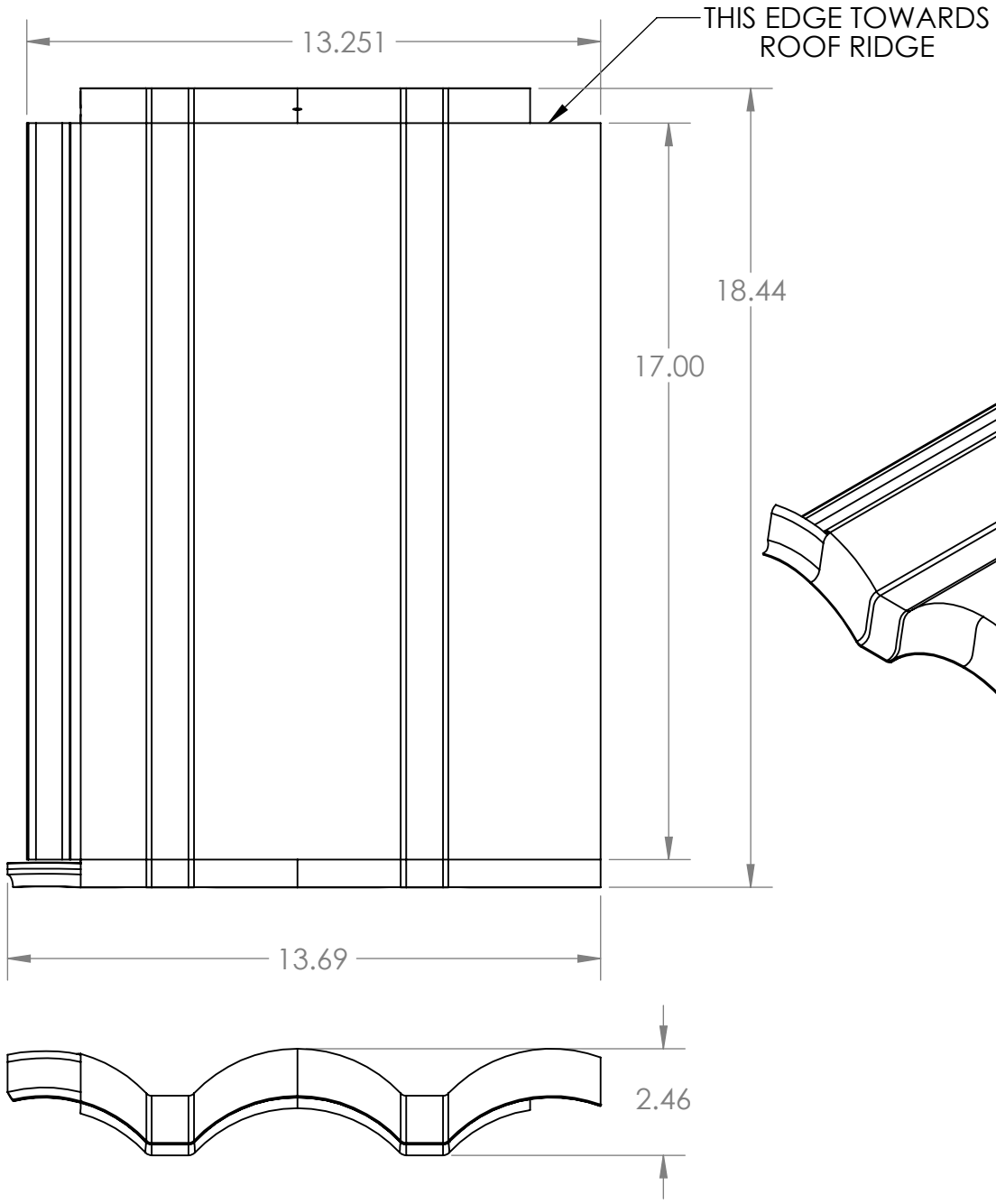

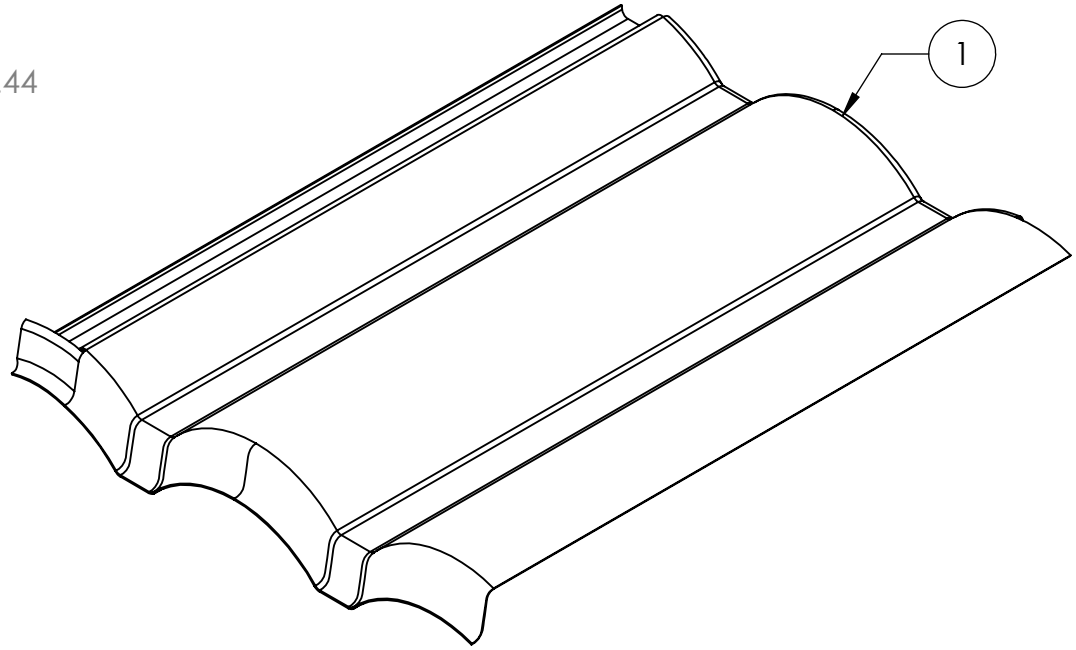

MATERIAL THICKNESS .032

Quick Mount PV

TITLE:

QMC-TRF-W: FLASHING, TILE REPLACEMENT, W-TILE, COMPONENT

UNLESS OTHERWISE SPECIFIED:
DIMENSIONS ARE IN INCHES
TOLERANCES:
FRACTIONAL ± 1/8
TWO PLACE DECIMAL ±.19
THREE PLACE DECIMAL ±.094

SIZE	DRAWN BY:	REV
A	DATE: 6/9/2017	1
SCALE: 1:4	WEIGHT: 0.92	SHEET 1 OF 1

PROPRIETARY AND CONFIDENTIAL
THE INFORMATION CONTAINED IN THIS DRAWING IS THE SOLE PROPERTY OF QUICK MOUNT PV. ANY REPRODUCTION IN PART OR AS A WHOLE WITHOUT THE WRITTEN PERMISSION OF QUICK MOUNT PV IS PROHIBITED. **COPYRIGHT © 2016 QUICK MOUNT PV**

DO NOT SCALE DRAWING

5 4 3 2 1