| PART # TABLE | |
|---|---|
| P/N | DESCRIPTION |
| 004201D | FLASHKIT SFM TRIM S COMP DARK |

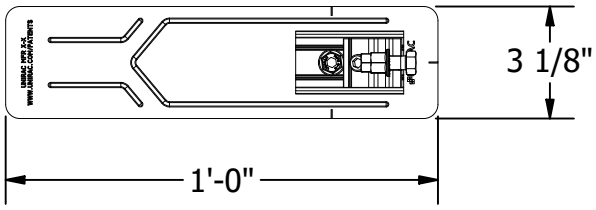


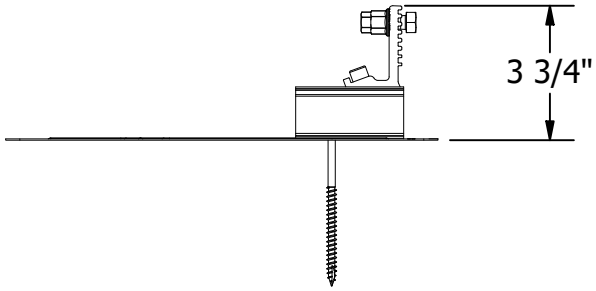


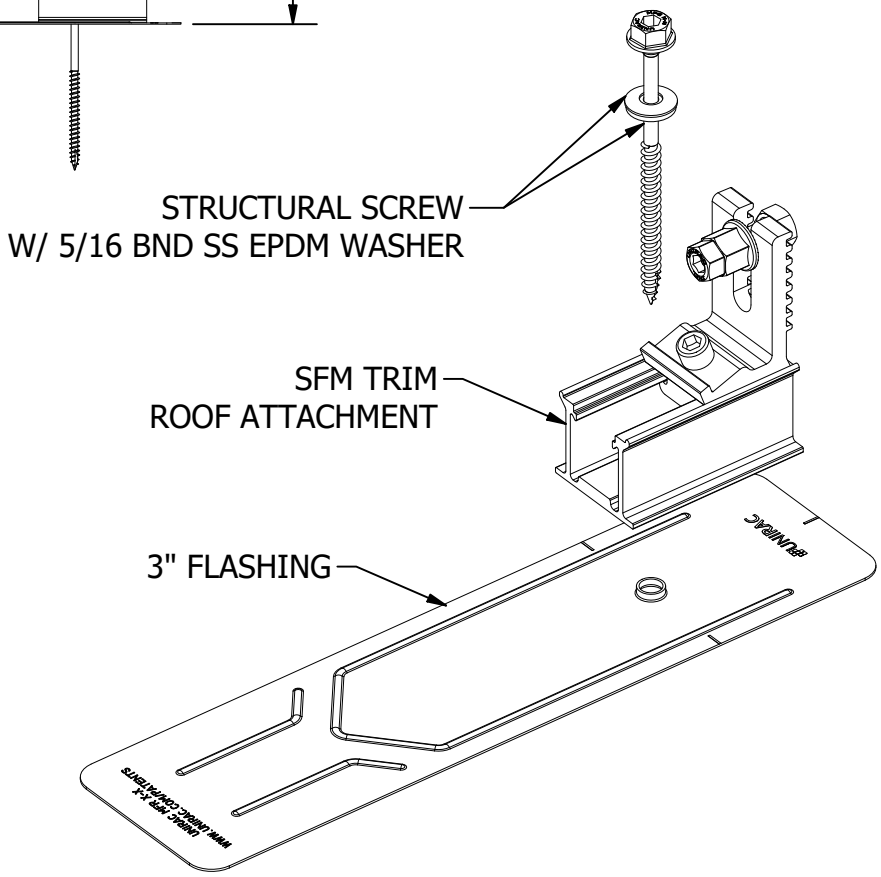


# FLASHKIT SFM TRIM S


UNIRAC
1411 BROADWAY BLVD. NE
ALBUQUERQUE, NM 87102 USA
PHONE: 505.242.6411
WWW.UNIRAC.COM


| | |
|---|---|
| PRODUCT LINE: | SFM INFINITY |
| DRAWING TYPE: | PARTS ASSEMBLY |
| DESCRIPTION: | FLASHKIT TRIM S |
| REVISION DATE: | 4/22/2019 |

DRAWING NOT TO SCALE
ALL DIMENSIONS ARE NOMINAL

PRODUCT PROTECTED BY ONE OR MORE US PATENTS

LEGAL NOTICE

SFM-A07

SHEET